Eetamax

Technical Datasheet

Eetamax Brito Street Lights

Eetamax Brito Street Light is the perfect lighting solutions for outdoor/Street lighting illumination. Eetamax Brito Street light is extremely reliable, robust, durable, and with low maintenance with glare free light distribution.

Features

- Aesthetically elegant & Robust design
- Cost Effective Product Range
- Excellent thermal design for long life
- Top openable driver compartment for easy maintenance
- 10kV Surge Protection and inbuilt Electronic Protections
- Asymmetric Batwing Spread Lens for wider road coverage

Residencial Roads

Parks & Garden

Car Parking Area

Building Area

Campus Lighting

IP65

IK07

LM 80

4kV Surge

440VAC Protection

Eetamax
Energy Efficient LED Lighting Systems

Brito Street Light - Technical Specifications :

Mechanical Specification	
Fixture Housing	LM6 Aluminium Alloy PDC for optimum thermal management
Diffuser Closure	Polycarbonate Lens
Mounting Pole Size	Suitable for 28-32 mm OD pipe
IP & IK	IP65 & IK07
Luminaire Specification	
Available Variant	30W | 40W | 50W | 60W | 70W | 80W
System Efficacy	125lm/W |110lm/W |110lm/W |110lm/W |105lm/W |100lm/W
L70 Life	>54,000 Br.hrs
Operating Temperature	From -20° to +50° C
Driver Specification	
Type of Driver	Constant Current
Input Voltage Range	160VAC ~ 300 VAC
Frequency Range	50 Hz - 60 Hz
Power factor	> 0.97
Total Harmonic Distortion	< 10 %
Surge Protection	For 30W,40W - 4 kV For 50W, 60W, 70W, 80W - 4 kV + 10 kV External SPD
Protection	Surge Protection Output Short Circuit Overload Protection Over Voltage Protection Thermal Protection Mis- Wiring 440 VAC protection
LED Chip	
Light Source	High Power SMD LED Chip
Lamp Efficacy	>150 lm/W
Colour Temperature	3000K - 6500K
CRI	>70
Certification/Report	LM80, Photo Biologically safe

Eetamax
Energy Efficient LED Lighting Systems

Eetamax Brito Street Light - Standard Parameters

Sr.	System Wattage	Length (mm)	Width (mm)	Height (mm)	Weight (Kg)	Product Code
1	30W	275 mm	90 mm	60 mm	1 Kg	Brito-SL-30W765S
2	40W					Brito-SL-40W765S
3	50W	330 mm	157 mm	65 mm	1.7 Kg	Brito-SL-50W765S
3	60W					Brito-SL-60W765S
4	70W					Brito-SL-70W765S
5	80W					Brito-SL-80W765S

Mechanical Drawing

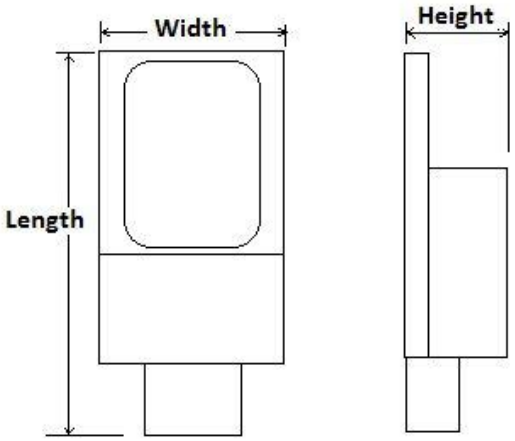

Product Code Nomenclature

Brito — Product Family Name

SL — Street Light

30W — Available Wattage:
- 30W
- 40W
- 50W
- 60W
- 70W
- 80W

7 — CRI >70

65 — Available CCT options
- 6500K
- 5700K
- 5000K
- 4000K
- 3000K

S
- ON-OFF Switching (S)
- Analog Dimming (AN)
- DALI Dimmable (DA)

*Product Codes may vary according to requirement.

Eetamax
Energy Efficient LED Lighting Systems

WE OFFER MOST EFFICIENT QUALITY LIGHT

Eetamax Sales Locations

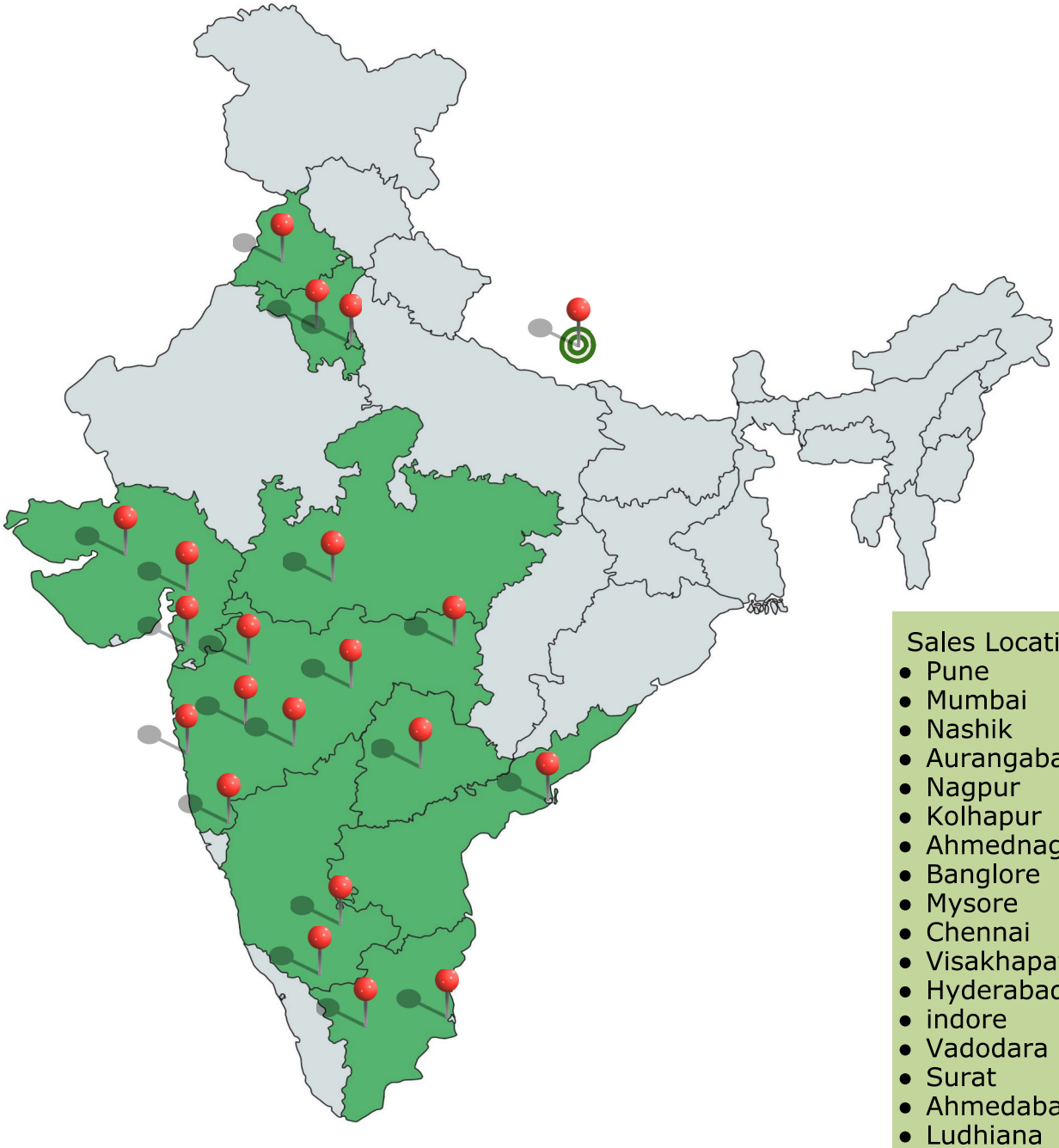

Sales Locations :

- Pune
- Mumbai
- Nashik
- Aurangabad
- Nagpur
- Kolhapur
- Ahmednagar
- Banglore
- Mysore
- Chennai
- Visakhapatnam
- Hyderabad
- indore
- Vadodara
- Surat
- Ahmedabad
- Ludhiana
- Bahadurgarh
- Delhi
- Nepal

Contact Us

Eetamax Energy Solutions Pvt. Ltd.

L-141,MIDC Industrial Area, Ahmednagar- 414111,Maharashtra India

Email : marketing@eetamax.com | Website : www.eetamax.com

Follow Us on Social Media